Ball Valve

AN-111R

1-PC Stainless Steel Ball Valve
Reduce Port,1000WOG,PN64

FEATURES:

- Blow-out Proof Stem
- Investment Casting Body
- Reduce Port
- Various Thread Standard Available

STANDARD:

- Design: ASME B16.34
- Wall Thickness: 100% ASME B16.34,GB12224
- Pipe Thread: ANSI B 1.20.1,BS 21/2779,DIN 259/2999,ISO 228
- Inspection & Testing:API 598

NO.	PARTS NAME	MATERIAL
1	Body	SS316
2	Stem	SS316
3	Spring Washer	PTFE
4	Thrust Washer	PTFE
5	Packing Gland	PTFE
6	Washer	SS304
7	Ball	SS316
8	Ball Seat	15% reinforced graphite teflon
9	End Plug	SS316
10	Handle Cover	Plastic
11	locking Device	SS304
12	Handle	Plastic
13	Nut	SS304

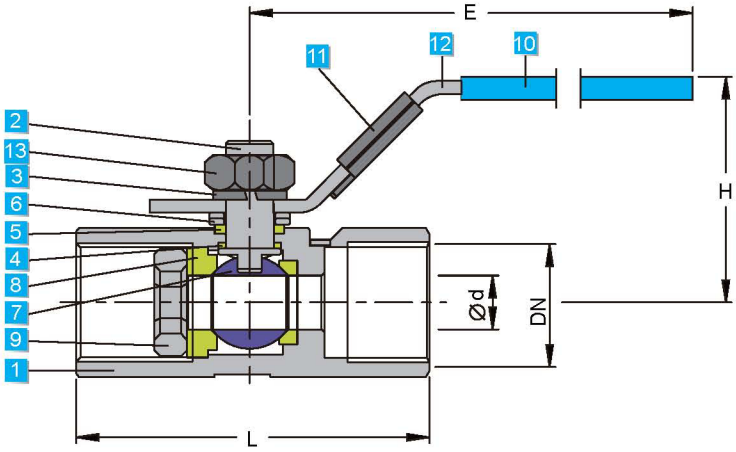

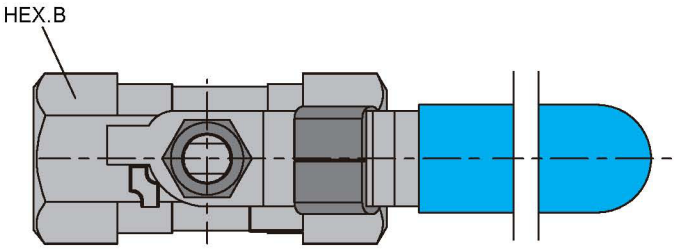

Unit:mm

Size	ød	L	H	E	HEX.B	End Thread
1/4"	5	39	31	70	17	BSPT
3/8"	7	44	36	80	21	
1/2"	9	59	42	95	25	
3/4"	12.5	60	45	95	32	
1"	15	72	54	110	38	
1-1/4"	20	77	59	110	48	
1-1/2"	25	84	63.5	150	53	
2"	32	100	70	150	66	
2-1/2"	38	120	95	200	82	
3"	48	142	103	200	96	